Guide for East Hall 2 - 3 (Aisle Carpet Color: Blue)

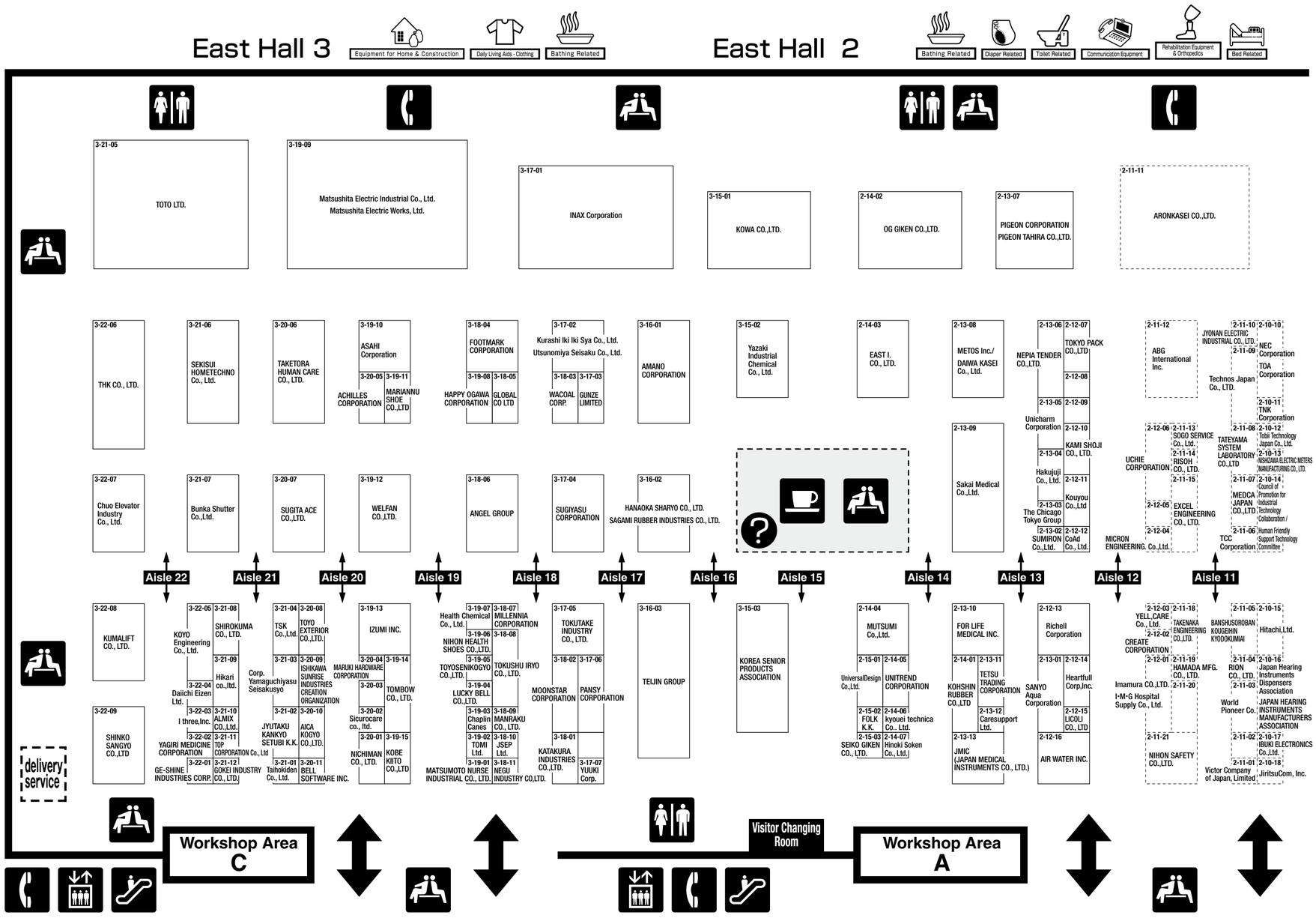

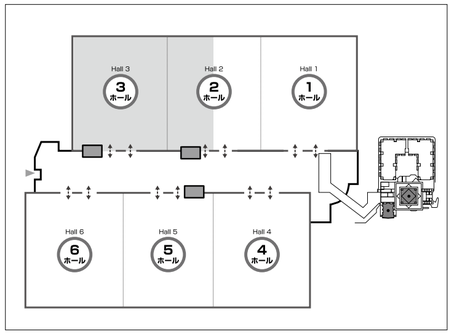

総合案内所／会場内案内所
Information

エレベーター
Elevator

エスカレーター
Escalator

The escalator next to East Hall 4 is for wheelchair users.

トイレ
Restrooms

電話
Telephone

休憩所
Lounge

軽食コーナー
Snack Corner

There are also restaurants within the Tokyo Big Sight facilities for visitors.

The Aisle Carpet Color for East Hall 2 - 3 is Blue.

●Japanese Exhibitors in East Hall 2 - 3 (Alphabetical Order)

Exhibitor	Booth No.
ACHILLES CORPORATION	3-20-05
AICA KOGYO CO.,LTD.	3-20-10
AIR WATER INC.	2-12-16
ALMIX CO.,Ltd.	3-21-10
AMANO CORPORATION	3-16-01
ANGEL GROUP	3-18-06
ASAHI Corporation	3-19-10
BELL SOFTWARE INC.	3-20-11
Bunka Shutter Co.,Ltd.	3-21-07
Caresupport Ltd.	2-13-12
Chaplin Canes	3-19-03
Chuo Elevator Industry Co., Ltd.	3-22-07
CoAd Co., Ltd.	2-12-12

Exhibitor	Booth No.
Corp. Yamaguchiyasu Seisakusyo	3-21-03
Daiichi Eizen Ltd.	3-22-04
EAST I. CO., LTD.	2-14-03
FOLK K.K.	2-15-02
FOOTMARK CORPORATION	3-18-04
FOR LIFE MEDICAL INC.	2-13-10
GLOBAL CO LTD	3-18-05
GOKEI INDUSTRY CO., LTD.	3-21-12
GUNZE LIMITED	3-17-03
Hakujuji Co., Ltd.	2-13-04
HANAOKA SHARYO CO., LTD.	3-16-02
HAPPY OGAWA CORPORATION	3-19-08

Exhibitor	Booth No.
Health Chemical Co., Ltd.	3-19-07
Heartfull Corp,Inc.	2-12-14
Hikari co.,ltd.	3-21-09
Hinoki Soken Co., Ltd.	2-14-07
I three,Inc.	3-22-03
INAX Corporation	3-17-01
ISHIKAWA SUNRISE INDUSTRIES CREATION ORGANIZATION	3-20-09
IZUMI INC.	3-19-13
JMIC (JAPAN MEDICAL INSTRUMENTS CO., LTD.)	2-13-13
JSEP Ltd.	3-18-10
JYUTAKU KANKYO SETUBI K.K.	3-21-02

Exhibitor	Booth No.
KAMI SHOJI CO., LTD.	2-12-10
KATAKURA INDUSTRIES CO.,LTD.	3-18-01
KOBE KIITO CO.,LTD	3-19-15
KOHSHIN RUBBER CO.,LTD	2-14-01
Kouyou Co.,Ltd.	2-12-11
KOWA CO.,LTD.	3-15-01
KOYO Engineering Co., Ltd.	3-22-05
KUMALIFT CO., LTD.	3-22-08
Kurashi Iki Iki Sya Co., Ltd.	3-17-02
kyouei technica Co.. Ltd.	2-14-06
LICOLI CO., LTD	2-12-15
LUCKY BELL CO.,LTD.	3-19-04
MANRAKU CO., LTD.	3-18-09

Exhibitor	Booth No.
MARIANNU SHOE CO.,LTD	3-19-11
MARUKI HARDWARE CORPORATION	3-20-04
MATSUMOTO NURSE INDUSTRIAL CO., LTD.	3-19-01
Matsushita Electric Industrial Co., Ltd.	3-19-09
Matsushita Electric Works, Ltd.	3-19-09
METOS Inc./DAIWA KASEI Co., Ltd.	2-13-08
MILLENNIA CORPORATION	3-18-07
MOONSTAR CORPORATION	3-18-02
MUTSUMI Co.,Ltd.	2-14-04

●Overseas Exhibitors in East Hall 2 - 3 (Alphabetical Order)

Exhibitor	Booth No.
NEGU INDUSTRY CO,LTD.	3-18-11
NEPIA TENDER CO.,LTD.	2-13-06
NICHIMAN CO., LTD.	3-20-01
NIHON HEALTH SHOES CO.,LTD.	3-19-06
OG GIKEN CO.,LTD.	2-14-02
PANSY CORPORATION	3-17-06
PIGEON CORPORATION	2-13-07
PIGEON TAHIRA CO.,LTD.	2-13-07
Richell Corporation	2-12-13
SAGAMI RUBBER INDUSTRIES CO., LTD.	3-16-02
Sakai Medical Co.,Ltd.	2-13-09

Exhibitor	Booth No.
SANYO Aqua Corporation	2-13-01
SEIKO GIKEN CO., LTD.	2-15-03
SEKISUI HOMETECHNO Co., Ltd.	3-21-06
SHINKO SANGYO CO.,LTD	3-22-09
SHIROKUMA CO., LTD.	3-21-08
Sicurocare co., ltd.	3-20-02
SUGITA ACE CO.,LTD.	3-20-07
SUGIYASU CORPORATION	3-17-04
SUMIRON Co.,Ltd.	2-13-02
Taihokiden Co., Ltd.	3-21-01
TAKETORA HUMAN CARE CO., LTD.	3-20-06
TEIJIN GROUP	3-16-03

Exhibitor	Booth No.
TETSU TRADING CORPORATION	2-13-11
The Chicago Tokyo Group	2-13-03
THK CO., LTD.	3-22-06
TOKUSHU IRYO CO., LTD.	3-18-08
TOKUTAKE INDUSTRY CO., LTD.	3-17-05
TOKYO PACK CO.,LTD	2-12-07
TOMBOW CO., LTD.	3-19-14
TOMI Ltd.	3-19-02
TOP CORPORATION. Co., Ltd	3-21-11
TOTO LTD.	3-21-05
TOYO EXTERIOR CO.,LTD.	3-20-08
TOYOSENIKOGYO CO.,LTD.	3-19-05

Exhibitor	Booth No.
TSK Co.,Ltd.	3-21-04
Unicharm Corporation	2-13-05
UNITREND CORPORATION	2-14-05
UniversalDesign Co.,Ltd.	2-15-01
Utsunomiya Seisaku Co., Ltd.	3-17-02
WACOAL CORP.	3-18-03
WELFAN CO.,LTD.	3-19-12
YAGIRI MEDICINE CORPORATION	3-22-02
Yazaki Industrial Chemical Co., Ltd.	3-15-02
YUUKI Corp.	3-17-07

Exhibitor	Booth No.
GE-SHINE INDUSTRIES CORP.	3-22-01
KOREA SENIOR PRODUCTS ASSOCIATION	3-15-03